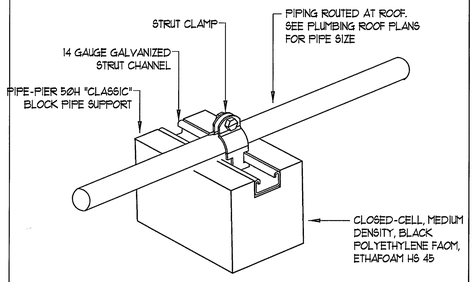

NOTE:
- MAXIMUM SPACING BETWEEN SUPPORT BLOCKS SHALL BE NO GREATER THAN 6'-0".
- ALL PIPING SHALL BE SUPPORTED WITHIN 2'-0" ON BOTH SIDES OF EACH CHANGE IN DIRECTION.

GAS/CONDENSATE PIPING SUPPORT ON ROOF 20 NTS

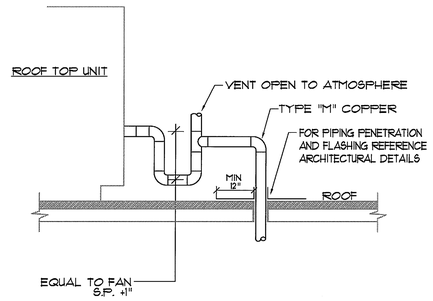

CONDENSATE THRU ROOF 19 NTS

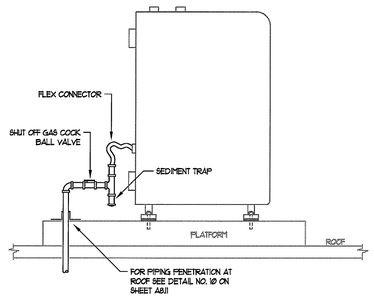

GAS PIPING AT BOILER 18 NTS

22 NTS

21 NTS

27 NTS

26 NTS

25 NTS

24 NTS

23 NTS

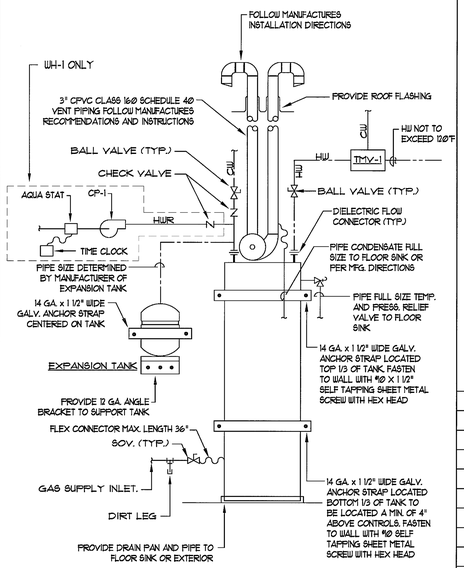

WH-1, WH-2 AND WH-4 ONLY

NATURAL GAS CONDENSING WATER HEATER 29 NTS

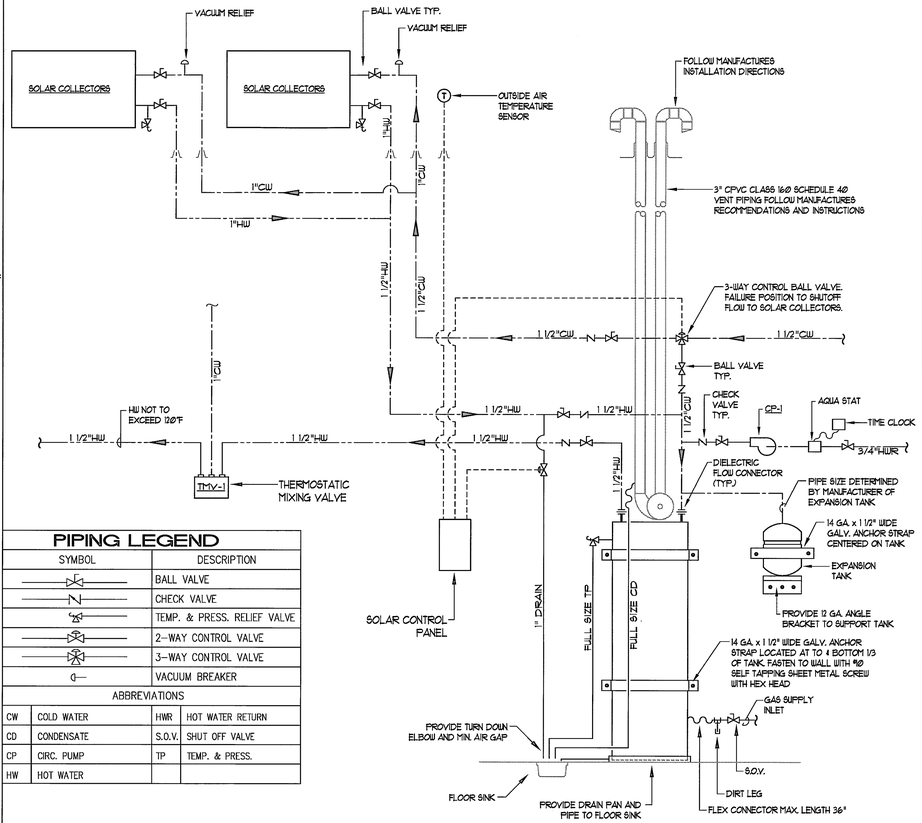

PIPING LEGEND

SYMBOL	DESCRIPTION
	BALL VALVE
	CHECK VALVE
	TEMP. & PRESS. RELIEF VALVE
	2-WAY CONTROL VALVE
	3-WAY CONTROL VALVE
	VACUUM BREAKER

ABBREVIATIONS

CW	COLD WATER	HWR	HOT WATER RETURN
CD	CONDENSATE	S.O.V.	SHUT OFF VALVE
CP	CIRC. PUMP	TP	TEMP. & PRESS.
HW	HOT WATER		

SOLAR WATER HEATING DIAGRAM 28 NTS

31 NTS

30 NTS

33 NTS

32 NTS

SWATT | MIERS ARCHITECTS

5845 Doyle Street, Suite 104
Emeryville, CA 94608
Tel: 510 985 9779
Fax: 510 985 0116
www.swattmiers.com

BID SET

PREVAILING WAGE JOB

JAN 19 2010

REGISTERED PROFESSIONAL ENGINEER DAVID P. LEDUC No. 22271 EXP. 12/31/11 MECHANICAL STATE OF CALIFORNIA

MERRICK & ASSOCIATES
MECHANICAL CONSULTING AND ENGINEERING
9606 Tierra Grande Street, Suite 206
San Diego, California 92126
(858) 549-9980
fax. (858) 549-9987

PALM SPRINGS ANIMAL CARE FACILITY

4575 E. MESQUITE AVE.
PALM SPRINGS, CA 92262

CITY OF PALM SPRINGS
PROJECT NO. CP. 07-24

APN: 680-020-010

Issue

Rev	Date	By	Description
1	8/18/09	TH	DD SET
2	10/8/09	BL	PROGRESS SET
3	11/23/09	BL	Bldg. Permit Set
4	01/04/10	BL	Bldg. Permit Re-Submittal
5	01/18/10	BL	Bid Set

NOT FOR CONSTRUCTION

Drawn By	RO
Checked By	DM
Job No.	0903
Issue Date	01/18/10
Scale	1/8"=1'-0"

Reference North

Drawing Title

PLUMBING DETAILS

P1.2

Sheet

These plans, drawings and specifications are the property of Swatt | Miers Architects and any use and/or reuse thereof in part or in whole without the written permission of the Architect is prohibited.
Copyright 2009 Swatt | Miers Architects