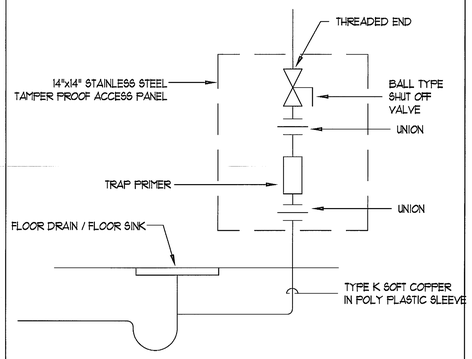

TRAP PRIMER — NTS — 5

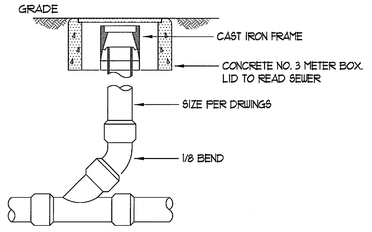

GRADE CLEANOUT

GRADE CLEANOUT SHALL BE USED WHERE CALLED OUT WITHIN ALL NON HARDSCAPE AREAS WITHIN 5'-0" FROM EXTERIOR OF BUILDING.

GRADE CLEANOUT — NTS — 4

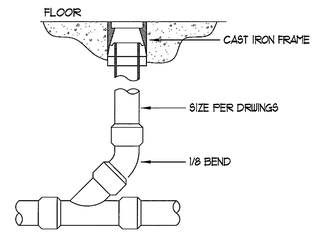

FLOOR CLEANOUT

FLOOR CLEANOUT SHALL BE USED WHERE CALLED OUT WITHIN ALL INTERIOR BUILDING SPACES AND WITHIN ALL HARDSCAPE AREAS WITHIN 5'-0" FROM EXTERIOR OF BUILDING.

FLOOR CLEANOUT — NTS — 3

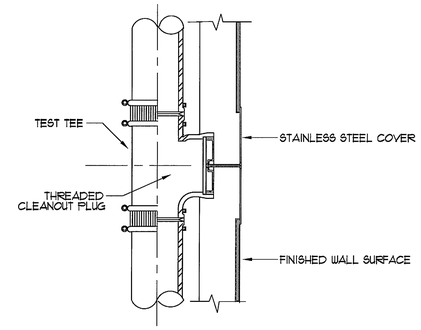

NO-HUB WITH ACCESS COVER

WALL CLEANOUT — 2

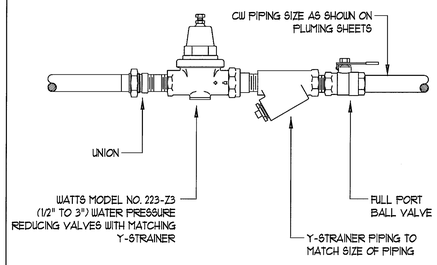

PRESSURE REDUCING ASSEMBLY — NTS — 1

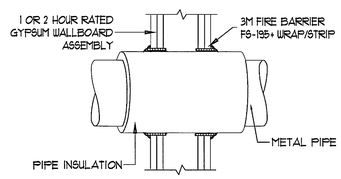

CONSULT CURRENT UNDERWRITERS LABORATORIES "FIRE RESISTANCE DIRECTORY" FOR DETAILS

UL SYSTEM WL5001

1. WALL ASSEMBLY - THE 1 OR 2 HR FIRE-RATED GYPSUM WALL BOARD/STUD WALL ASSEMBLY SHALL BE CONSTRUCTED OF THE MATERIALS AND IN THE MANNER DESCRIBED IN THE INDIVIDUAL U300 OR U400 SERIES WALL OR PARTITION DESIGN IN THE UL FIRE RESISTANCE DIRECTORY AND SHALL INCLUDE THE FOLLOWING CONSTRUCTION FEATURES:
   A. STUDS - WALL FRAMING MAY CONSIST OF EITHER WOOD STUDS OR STEEL CHANNEL STUDS. WOOD STUDS TO CONSIST OF NOM. 2 BY 4 IN. LUMBER SPACED 16 IN. O.C. WITH NOM. 2 BY 4 IN. LUMBER AND PLATES AND CROSS BRACES. STEEL STUDS TO BE MIN. 3-5/8 IN. WIDE BY 1-3/8 IN. DEEP CHANNELS SPACED MAX 24 IN. O.C.
   B. WALL BOARD, GYPSUM - NOM. 5/8 IN. THICK, 4 FT. WIDE SQUARE OR TAPERED EDGES. THE GYPSUM WALL BOARD TYPE, THICKNESS, NUMBER OF LAYERS, FASTENER TYPE AND SHEET ORIENTATION SHALL BE AS SPECIFIED IN THE INDIVIDUAL U300 OR U400 SERIES DESIGN IN THE UL FIRE RESISTANCE DIRECTORY. MAX DIAM. OF OPENING IS 14-1/2 IN. FOR WOOD STUD WALLS AND 18 IN. FOR STEEL STUD WALLS.
   THE HOURLY RATING OF THE FIRE STOP SYSTEM IS 1 HR WHEN INSTALLED IN A 1 HR FIRE RATED WALL AND 2 HR WHEN INSTALLED IN A 2 HR FIRE RATED WALL.
2. THROUGH PENETRANTS - ONE METALLIC PIPE OR TUBING TO BE CENTERED WITHIN THE FIRE STOP SYSTEM. PIPE OR TUBING TO BE RIGIDLY SUPPORTED ON BOTH SIDES OF WALL ASSEMBLY. THE FOLLOWING TYPES AND SIZES OF METALLIC PIPES OR TUBING MAY BE USED:
   A. STEEL PIPE - NOM. 12 IN. DIAM. (OR SMALLER) SCHEDULE 10 (OR HEAVIER)
   B. COPPER TUBING - NOM. 6 IN. DIAM. (OR SMALLER) TYPE L (OR HEAVIER)
   C. COPPER PIPE - NOM. 6 IN. DIAM. (OR SMALLER) REGULAR (OR HEAVIER) COPPER PIPE.
3. PIPE COVERING - NOM. 1 OR 2 IN. THICK HOLLOW CYLINDRICAL HEAVY DENSITY (MIN. 3.5 PCF) GLASS FIBER UNITS JACKETED ON THE OUTSIDE WITH AN ALL SERVICE JACKET. LONGITUDINAL JOINTS SEALED WITH METAL FASTENERS OR FACTORY-APPLIED SELF-SEALING LAP TAPE. TRANSVERSE JOINTS SEALED WITH METAL FASTENERS OR WITH BUTT STRIP TAPE SUPPLIED WITH THE PRODUCT. WHEN NOM. 1 IN. THICK PIPE COVERING IS USED THE ANNULAR SPACE BETWEEN THE PIPE COVERING AND THE CIRCULAR CUTOUT IN THE GYPSUM WALL BOARD ALTERS ON EACH SIDE OF THE WALL SHALL BE MIN. 1/4 IN. TO MAX 3/8 IN. WHEN NOM. 2 IN. THICK PIPE COVERING IS USED THE ANNULAR SPACE BETWEEN THE PIPE COVERING AND THE CIRCULAR CUTOUT IN THE GYPSUM WALL BOARD LAYERS ON EACH SIDE OF THE WALL SHALL BE MIN. 1/2 IN. TO MAX 3/4 IN.
   SEE PIPE AND EQUIPMENT COVERING MATERIALS (BR&U) CATEGORY IN BUILDING MATERIALS DIRECTORY FOR NAMES OF MANUFACTURES. ANY PIPE COVERING MATERIAL MEETING THE ABOVE SPECIFICATIONS AND BEARING THE UL CLASSIFICATION MARKING WITH A FLAME SPREAD INDEX OF 25 OR LESS AND A SMOKE DEVELOPED INDEX OF 50 OR LESS MAY BE USED.
   THE HOURLY T RATING OF THE FIRE STOP SYSTEM IS 3/4 HR WHEN NOM. 1 IN. THICK PIPE IS USED. THE HOURLY T RATING OF THE FIRE STOP SYSTEM IS 1 HR WHEN AND 1-1/2 HR WHEN NOM. 2 IN. THICK PIPE COVERING IS USED WITH 1 HR AND 2 HR FIRE RATED WALLS, RESPECTIVELY.
4. FIRE STOP SYSTEM - INSTALLED SYMMETRICALLY ON BOTH SIDES OF WALL ASSEMBLY. THE DETAILS OF THE FIRE STOP SYSTEM SHALL BE AS FOLLOWS:
   A. FILL, VOID OR CAVITY MATERIALS - WRAP STRIP - NOM. 1/4 IN. THICK INTUMESCENT ELASTOMERIC MATERIAL FACED ON ONE SIDE WITH ALUMINUM FOIL, SUPPLIED IN 2 IN. WIDE STRIPS. NOM. 2 IN. WIDE STRIP TIGHTLY WRAPPED AROUND PIPE COVERING (FOIL SIDE OUT WITH SEAM BUTTED. WRAP STRIP LATER SECURELY BOUND WITH STEEL WIRE OR ALUMINUM FOIL TAPE AND SLIDE INTO ANNLAR SPACE APPROX. 1-1/4 IN. SUCH THAT APPROX. 3/4 IN. OF THE WRAP STRIP WIDTH PROTRUDES FROM THE WALL SURFACE. ONE LAYER OF WRAP STRIP IS REQUIRED WHEN NOM. 1 IN. THICK PIPE COVERING IS USED. TWO LAYERS OF WRAP STRIP ARE REQUIRED WHEN NOM. 2 IN. THICK PIPE COVERING MINNESOTA MINING & MFG. CO. FS-195+
   B. FILL, VOID OR CAVITY MATERIALS - CAULK - MIN. 1/4 IN. DIAM. CONTINUOS BEAD APPLIED TO THE WRAP STRIP/WALL INTERFACE AND TO THE EXPOSED EDGE OF THE WRAP STRIP LAYER APPROX. 3/4 IN. FROM THE WALL SURFACE. BEARING THE UL CLASSIFICATION MARKING.

PIPE THROUGH RATED WALL — NTS — 7

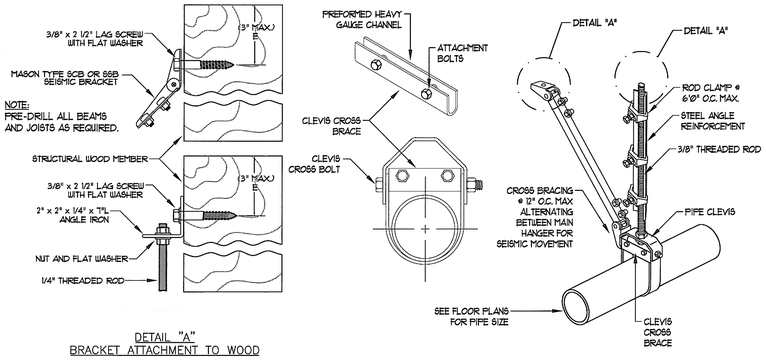

PIPING SCHEDULE	
PIPE DIA. (IN.)	WEIGHT (LB/FT.)
1/2"	1.29
3/4"	1.71
1"	2.54
1 1/4"	3.42
1 1/2"	4.11
2"	5.52
2 1/2"	8.78
3"	11.52
4"	16.38
6"	29.01
8"	44.03

PIPING HANGER ATTACHMENT DETAIL — NTS — 6

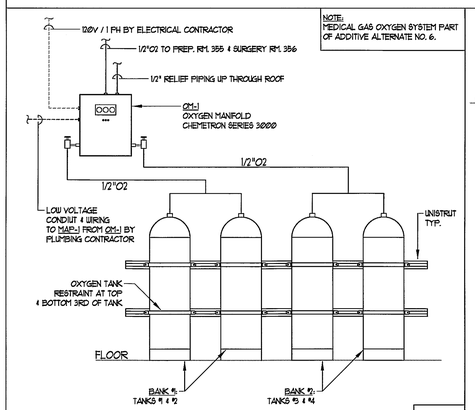

NOTE: MEDICAL GAS OXYGEN SYSTEM PART OF ADDITIVE ALTERNATE NO. 6.

OXYGEN TANK MANIFOLD — NTS — 12

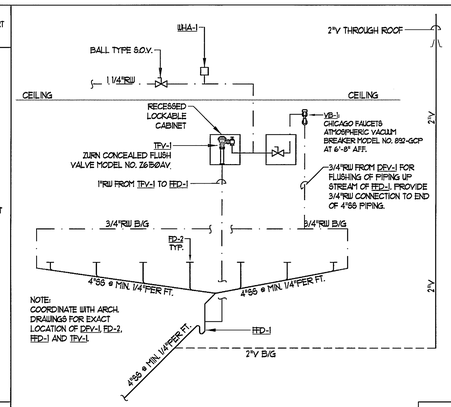

DOG WARD DRAIN PIPING SCHEMATIC — NTS — 11

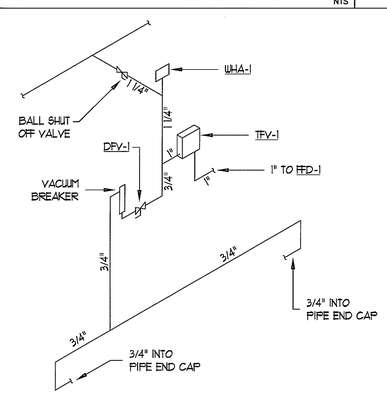

PIPING SCHEMATIC — NTS — 10

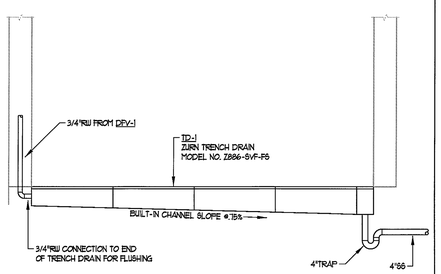

TRENCH DRAIN DETAIL — NTS — 9

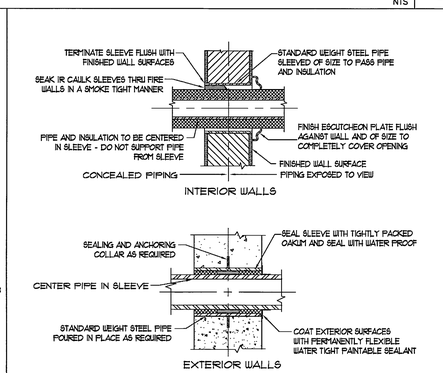

PIPE THRU WALL — NTS — 8

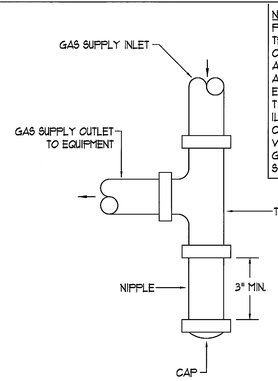

NOTE: PER CPC 1212.1 WHERE A SEDIMENT TRAP IS NOT INCORPORATED AS PART OF THE GAS UTILIZATION EQUIPMENT, A SEDIMENT TRAP MUST BE INSTALLED AS CLOSE TO THE INLET OF THE EQUIPMENT AS PRACTICAL AT THE TIME OF EQUIPMENT INSTALLATION. ILLUMINATING APPLIANCES, RANGES, CLOTHES DRYERS, DECORATIVE VENTED FIREPLACES, AND OUTDOOR GRILLS ARE NOT REQUIRED TO BE SO EQUIPPED.

GAS PIPING SEDIMENT TRAP — NTS — 15

17 — NTS

16 — NTS

14 — NTS

13 — NTS

SWATT | MIERS ARCHITECTS

5845 Doyle Street, Suite 104
Emeryville, CA 94608
Tel: 510 985 9779
Fax: 510 985 0116
www.swattmiers.com

JAN 19 2010

PREVAILING WAGE JOB

BID SET

REGISTERED PROFESSIONAL ENGINEER DAVID P. BERGER No. 22271 EXP. 12/31/11 MECHANICAL STATE OF CALIFORNIA

MERRICK & ASSOCIATES
MECHANICAL CONSULTING AND ENGINEERING
9606 Tierra Grande Street, Suite 206
San Diego, California 92126
(858) 549-9980
fax. (858) 549-9987

PALM SPRINGS ANIMAL CARE FACILITY

4575 E. MESQUITE AVE.
PALM SPRINGS, CA 92262

CITY OF PALM SPRINGS
PROJECT NO. CP. 07-24

APN: 680-020-010

Issue

Rev	Date	By	Description
1	8/18/09	TH	DD SET
2	10/8/09	BL	PROGRESS SET
3	11/23/09	BL	Bldg. Permit Set
4	01/04/10	BL	Bldg. Permit Re-Submittal
5	01/18/10	BL	Bid Set

NOT FOR CONSTRUCTION

Drawn By	RO
Checked By	DM
Job No.	0903
Issue Date	01/18/10
Scale	1/8"=1'-0"

Reference North

Drawing Title

PLUMBING DETAILS

Sheet

P1.1

These plans, drawings and specifications are the property of Swatt | Miers Architects and any use and/or reuse thereof in part or in whole without the written permission of the Architect is prohibited.
Copyright 2009 Swatt | Miers Architects